PRODUCT SHEET

Description:
Glass Door Lock "Vitrio", CPL, KA 068, Cam 118, CK SISO, F/ Double Doors, CK:SISO, W/Striker

Item number:
14.09.349-0

Units	Box	Carton	HS Code	Barcode
Pcs.	20	200	8301300000	5704866047739

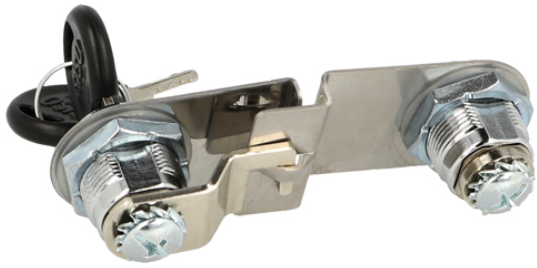

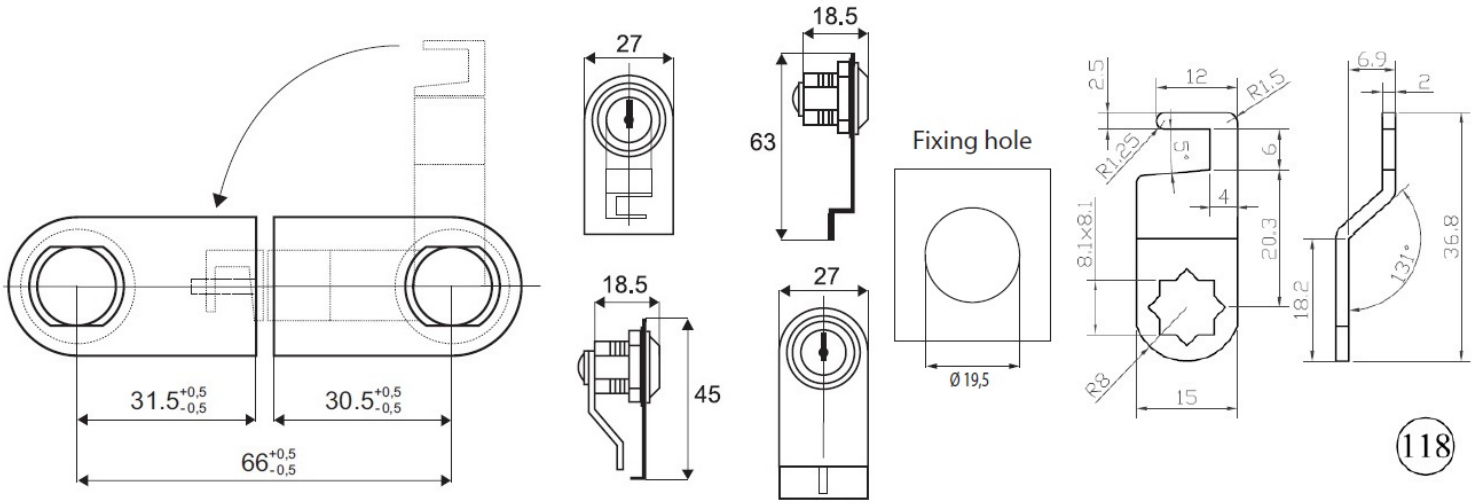

SISO A/S
Mileparken 11
DK-2740 Skovlunde
Denmark
VAT: DK 24786013

Phone +45 45 830 900

www.siso.dk
siso@siso.dk

Danske Bank
Nytorv Branch
Copenhagen
SWIFT: DABADKKK

Account no.
4180 3112 112936
IBAN Account
DK7230003112112936